**ABHIYANTRIKI**
**An International Journal of Engineering & Technology**
**(A Peer Reviewed & Indexed Journal)**
Vol. 4, No. 4 (April, 2017) http://www.aijet.in/ eISSN: 2394-627X

# Free Space Optical Communication (FSO)

***Jagdish Pradhan***
B. Tech.
Deptt. of Elec. & Communication Engineering,
Gandhi Institute of Engineering & Technology,
Gunupur, Rayagada, India

***Bishal Kumar Pandey****
B. Tech.
Deptt. of Elec. & Communication Engineering,
Gandhi Institute of Engineering & Technology,
Gunupur, Rayagada, India

***Md. Kashif Ahmed***
B. Tech.
Deptt. of Elec. & Communication Engineering,
Gandhi Institute of Engineering & Technology,
Gunupur, Rayagada, India

***Rashmita Gouda***
Lecturer
Deptt. of Elec. & Communication Engineering,
Gandhi Institute of Engineering & Technology,
Gunupur, Rayagada, India

***Abstract***

*Today's demand is a communication link with maximum performance and minimum errors. Free Space Optics is a medium with high bandwidth having maximum data rates and security issues favouring its promotion for the present era. Turbulent atmosphere affects the performance of the link. Humidity, water vapor, signals absorption, beam scintillation, spreading and wandering are some of the factors which cause laser beam degradation. Maintaining a free space optical link between two junctions is a tough challenge and needs enhancement in its features. This survey paper discusses the difficulties of developing free space optical links. It also tells us the basic structure of FSO, how we can improve its performance and effect of atmospheric attenuation on the signal.*

***Keywords****: FSO, Fiber Optics, Scatterer, Attenuation.*

****Author for correspondence*** bishalpandey52@gmail.com

## 1. Introduction

FSO is an optical wireless, point to point line of sight broadband solution. The FSO is very useful because the limitations like spectrum scarcity, natural resource, regulated by state, power needs and lesser bandwidth are associated with radio frequency. These limitations are not associated with FSO technology. The FSO is available with lower cost. There are no fiber optics cable to lay, no expensive rooftop installations required and no security upgrades necessary. In addition, the system upgrades are generally made quite easily and no RF license is required. Another advantage of free space optical communication is that it is incredibly fast. These systems can currently transmit a large amount of data, 1.25 GB per second.

*What is FSO?*

FSO is an optical technology and simple concept involving the transmission of voice, video and data through the air using Lasers. It is not disruptive technology. It is more of an enabling

technology that promises to deliver that, ever-eluding high speed optical bandwidth to the ultimate end users.

## 2. Advantages of FSO as Compared to Fiber

FSO offers many advantages when compared to fiber:

- Significantly lower cost on average than the build out of a new fiber optical solution or leased lines.
- FSO can be deployed in days to weeks versus month to years.
- Bandwidth can easily be scaled (10 Mbps to 1.25 Gbps).
- As opposed to fiber, FSO can be redeployed if the customer moves or cancels service.

## 3. Limitations of FSO

The limitations of FSO are mainly signal propagation impediments which are as follows:

*Fog*: The major challenge to FSO communications is fog. The primary way to counter fog when deploying FSO is through a network design that shortens FSO link distances and adds network redundancies.

*Absorption*: Absorption occurs when suspended water molecules in the terrestrial atmosphere extinguish photons. This causes a decrease in the power density (attenuation) of the FSO beam and directly affects the availability of a system.

*Scattering*: Scattering is caused when the wavelength collides with the scatterer. The physical size of the scatterer determines the type of scattering. When the scatterer is smaller than the wavelength, this is known as Rayleigh scattering. When the scatterer is of comparable size to the wavelength, this is known as Mie scattering.

*Physical obstructions*: Flying birds can temporarily block a single beam, but this tends to cause only short interruptions, and transmissions are easily and automatically resumed.

*Building sway/seismic activity*: The movement of buildings can upset receiver and transmitter alignment.

*Safety*: To those unfamiliar with FSO, safety is often a concern because the technology uses lasers for transmission.

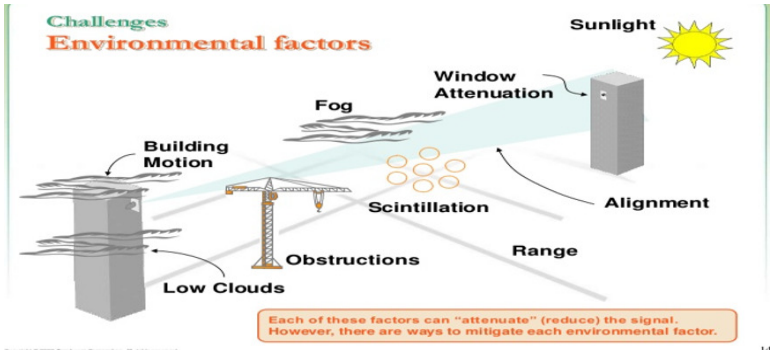


Fig. 1: Environmental factors in FSO communication

*Scintillation*: Heated air rising from the earth or man-made devices such as heating ducts creates temperature variations among different air pockets. This can cause fluctuations in signal amplitude which leads to image fluctuations at the FSO receiver end.

## 4. FSO: How it Works

FSO technology is surprisingly simple. It is based on connectivity between FSO based optical wireless units, each consisting of an optical transceiver provide full-duplex capability. Each optical wireless unit uses an optical source, plus a lens or telescope that transmits light through

the atmosphere to another lens receiving the information. At this point, the receiving lens or telescope connects to a high sensitivity receiver via optical fiber.

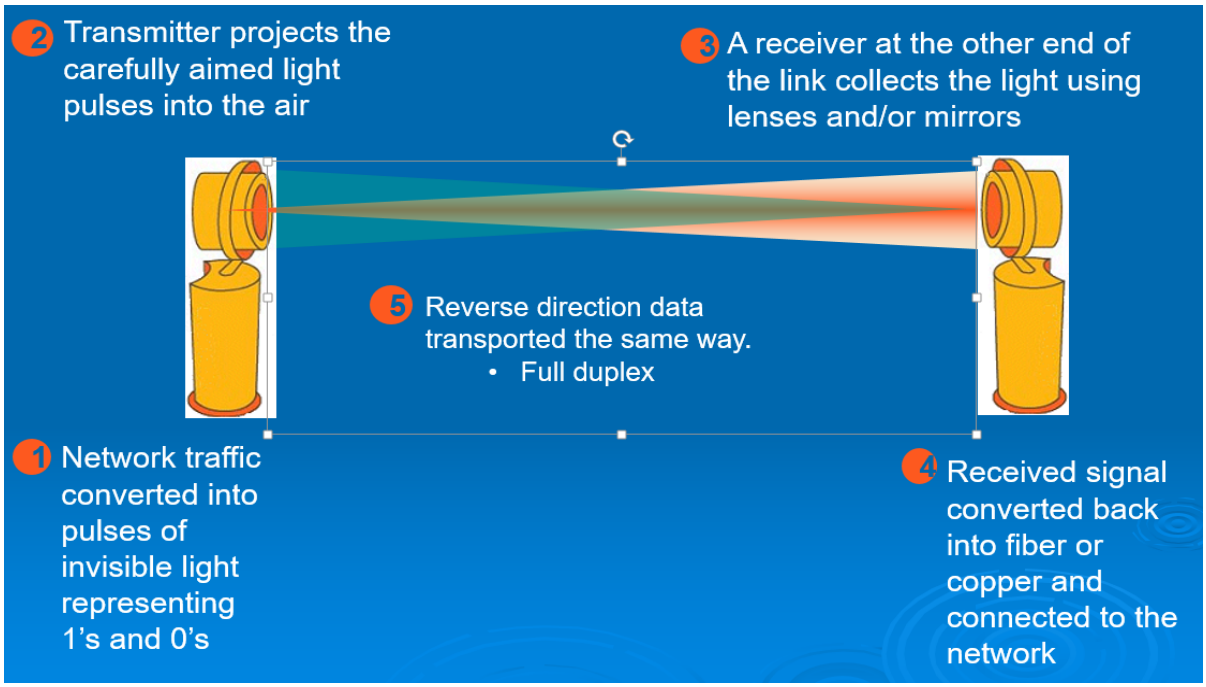


Fig. 2: Working of FSO communication

## 5. FSO Subsystems

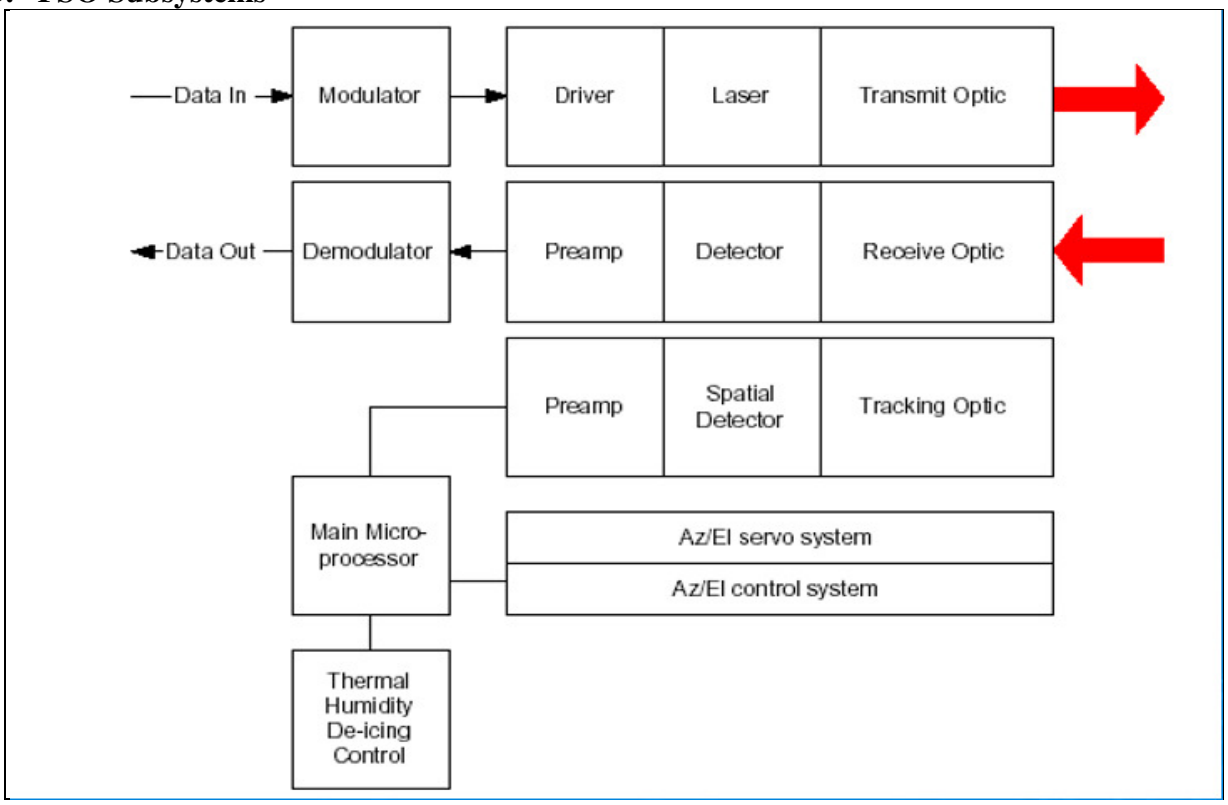


Fig. 3: Major subsystems of FSO

## 6. Simulation Setup

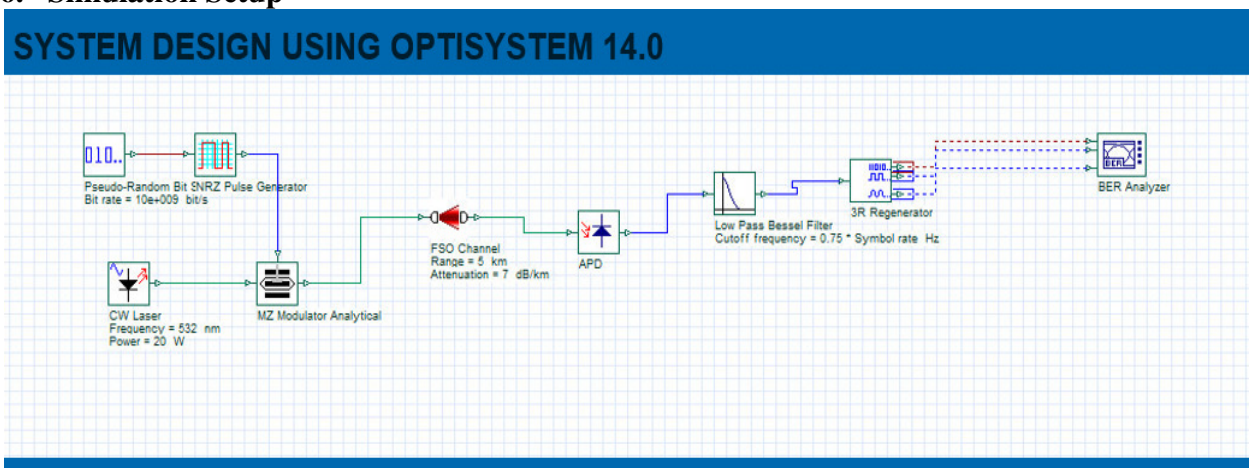


## 7. Simulation Result

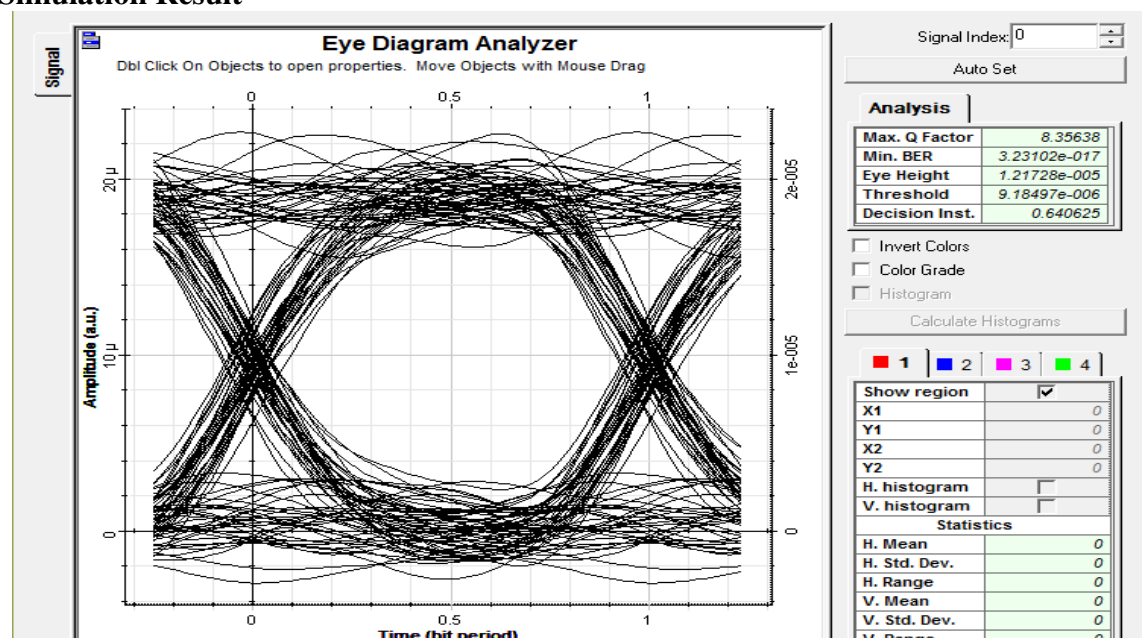


Table: Parameter values

| COMPONENT | PARAMETER | VALUE |
|---|---|---|
| 1.LASER | Power | 20 watt |
| | Frequency | 532nm |
| 2.FSO channel | Length | 5 km |
| | Attenuation | 7 dB/Km |
| 3. Pseudo-Random Bit Sequence Generator | Bit rate | 10 Gbps |
| 4.ADP photodiode | gain | 10 |
| 5.Low pass bassel filter | Cutoff frequency | 0.75*symbol rate |

## 8. Observation

We took to consideration the main cause of the problem that is atmosphere and worked on how to minimize its effect on transmission. The atmosphere attenuation (sigma) can be obtained by the sum of 4 coefficients.

$$\sigma = \alpha_m + \alpha_a + \beta_m + \beta a$$

Where, $\alpha_m$ = molecular absorption coefficient, $\alpha_a$ = aerosol absorption coefficient, βm = molecular or Rayleigh scattering coefficient, βα = aerosol or mie scattering coefficient.

The attenuation is related to the wavelength by the empirical formula,

$$\sigma \approx \beta_a = \frac{3.91}{V} \left(\lambda / 550\ nm\right)^{-q}$$

Where, V = Visibility in km, ƛ = Wave length in nanometers, and q = size distribution of scattering particle.

## 9. Application of FSO

The major applications of FSO are:

*Telecom network extensions*: FSO can be deployed to extend an existing metro ring or to connect new networks. These links generally do not reach the ultimate end user, but are more an application for the core of the network.

*Enterprise*: The flexibility of FSO allows it to be deployed in many enterprise applications such as LAN to LAN connectivity, Storage Area Networks, and intra-campus connections.

*Last-mile connectivity*: These are the links that reach the end user. They can deploy in point-to-point, point-to-multipoint, ring or mesh connections. Fiber deployment in urban areas could cost $300,000 - $700,000 given the costs involved in digging tunnels and obtaining rights-of-way. By contrast, a short FSO link of 155 Mbps might cost only $15,000 - $18,000.

*Fiber complement*: FSO may also be deployed as a redundant link to back up fiber. Most operators deploying fiber for business applications connect two fibers to secure a reliable service plus backup in the event of outage. Instead of deploying two fiber links, operators could opt to deploy an FSO system as the redundant link.

## 10. Conclusion

FSO equipment currently is being deployed for a variety of applications, such as last-mile connections to buildings, which may provide the greatest opportunity since FSO provides the high-speed links that customers need without the costs of laying fiber to the end user. We have developed a FSO link which can transmit the data upto 1 km without noise. The input power is 10 dBm above which safety issue arises because of the use of Laser.

## References

[1] www.freespaceoptics.com
[2] Radek K. (2007). BER and availability measured on FSO link. *Radio Engineering*, 16(3).
[3] Henniger, H. & Wilfert, O. (2010). An introduction to FSO communication. *Radio Engineering*.
[4] Tsukamoto, K., Komaki, S. and Matsumoto, M. (2007). Development project of radio on free space optics. Proceedings of SPIE.